LIGHTSync™ D-6

Network
Contact Interface

- CAT-5 wire control interface
- Maintained contacts
- 6- contact inputs
- 6- open collector outputs
- Provides interface for control of other systems
- BAS system interface
- Security system interface
- Optically isolated for protection
- UL, FCC approval for commercial use

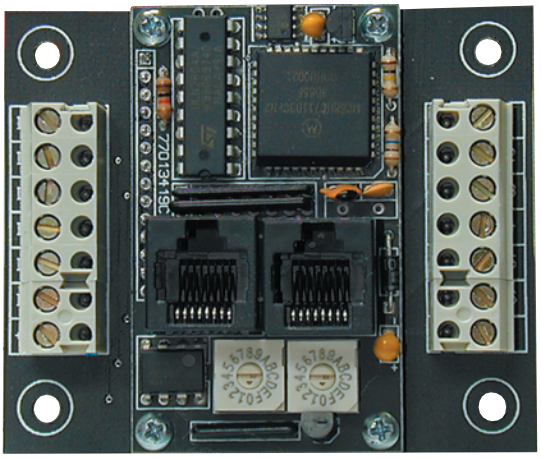

Overview

The ILC LightSync D6 allows for a reliable data line interface between an external Building Automation, Energy Management or Security System and your LightMaster lighting control system. This board features 6 inputs and 6 open collector outputs. Both inputs and outputs are optically isolated for enhanced processor protection and to ensure reliability. The Lightsync D6 does require 24 volts DC to be supplied by the external (BAS) system providing the interface.

Features

General Information

- UL Listed
- Mounts in controller or remotely

Characteristics

- Inputs: 6 Maintained (DC- = Active)
- Outputs: 6 Open collector
- Termination: standard screw terminals
- Screw-actuated clamps for use with #18 AWG solid or stranded wire
- LightSync data line addressable

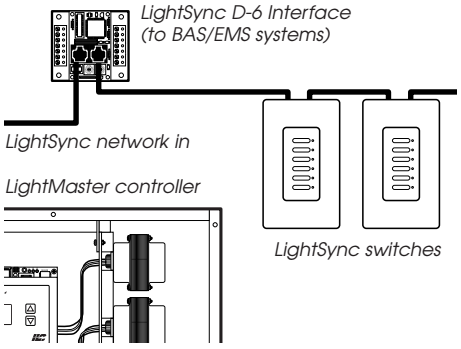

Typical BAS Interface

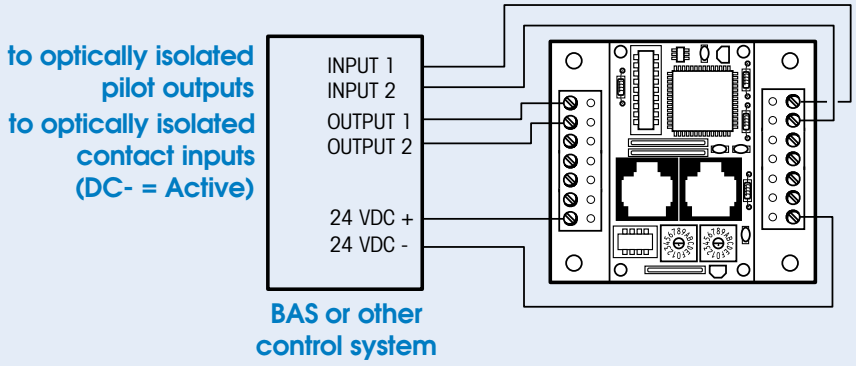

FOR USE IN
SA SN EN
LIGHTMASTER NETWORKS

INTELLIGENT LIGHTING CONTROLS, INC.

5229 Edina Industrial Boulevard
Minneapolis. Minnesota 55439
Phone 952 829 1900
FAX 952 829 1901
1-800-922-8004
www.ilc-usa.com

LIGHT Sync™ D-6

Network
Contact Interface

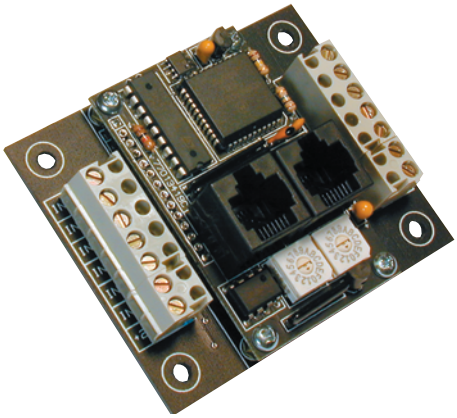

Physical Dimensions

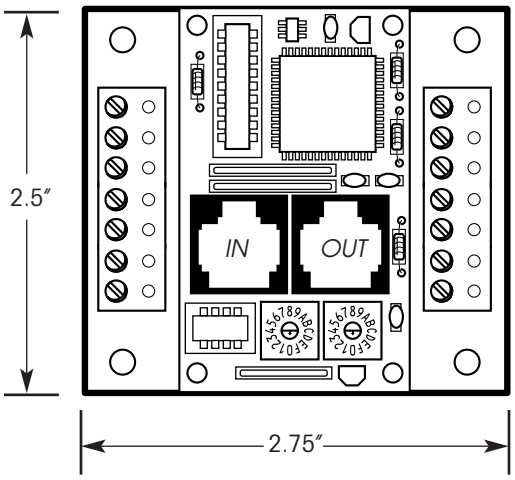

Specifications

Physical:
- Mounts in controller or remotely

Electrical:
- 5ma at 24 VDC
- 10-30 VDC (supplied by BAS)
- Inputs may be driven by open collector or dry contact outputs (DC = Active)
- 100mA open collector outputs

Capacities:
- 6 switch inputs
- 6 open collector outputs

Operating Environment:

• Location	Interior Space
• Operating Temperature	0° to 50° C (32° to 112° F)
• Relative Humidity	10% to 95% Non-condensing
• Atmosphere	Non-explosive, Non-corrosive
• Vibration	Stationary application NEMA Level A

Certifications:
- FCC and UL approval for commercial use

How to Order

Ordering a **LightSync D-6 Interface**

Order No. LSD6 PNL (sample)

LSD6 _ _ _

PNL= Panel Mount
RMT= Remote Mount

INTELLIGENT LIGHTING CONTROLS, INC.

5229 Edina Industrial Boulevard
Minneapolis. Minnesota 55439
Phone 952 829 1900
FAX 952 829 1901
1-800-922-8004
www.ilc-usa.com